HYDRA

USER MANUAL

Models: HYDRA10 & HYDRA15

PUMPS AUSTRALIA

BETTER BY DESIGN

1800 790 915

pumpsaustralia.com.au

Thank you for purchasing a quality Pumps Australia Hydrostatic (HYDRA). We reserve the right to make changes at any time without incurring any obligation.

Owner/User Responsibility: The owner and/or user must have an understanding of the manufacturer's operating instructions and warnings before using this pressure washer. Warning information should be emphasized and understood. If the operator is not fluent in English, the manufacturer's instructions and warnings shall be read to and discussed with the operator in the operator's native language by the purchaser/owner, making sure that the operator comprehends its contents.

Owner and/or user must study and maintain for future reference the manufacturers' instructions.

The operator must know how to stop the machine quickly and understand the operation of all controls. Never permit anyone to operate the engine without proper instructions.
This manual should be considered a permanent part of the machine and should remain with it if machine is resold. When ordering parts, please specify model and serial number. Use only identical replacement parts. This machine is to be used only by trained operators.

IMPORTANT SAFETY INFORMATION

WARNING: To reduce the risk of injury, read operating instructions carefully before using.

1. Read the owner's manual thoroughly. Failure to follow instructions could cause malfunction of the machine and result in death, serious bodily injury and/or property damage.

2. Know how to stop the machine and bleed pressure quickly. Be thoroughly familiar with the controls.

3. Stay alert — watch what you are doing.

4. All installations must comply with local codes. Contact your electrician, plumber, utility company or the selling distributor for specific details. If your machine is rated 250 volts or less, single phase will be provided with a ground fault circuit interrupter (GFCI). If rated more than 250 volts, or more than single phase this product should only be connected to a power supply receptacle protected by a GFCI

WARNING: Keep hose, and water spray away from electric wiring or fatal electric shock may result.
5. To protect the operator from electrical shock, the machine must be electrically grounded. It is the responsibility of the owner to connect this machine to a UL grounded receptacle of proper voltage and amperage ratings. Do not spray water on or near electrical components. Do not touch machine with wet hands or while standing in water. Always disconnect power before servicing.

WARNING: Flammable liquids can create fumes which can ignite, causing property damage or severe injury.
WARNING: Risk of explosion — Operate only where open flame or torch is permitted.
6. In oil burning models, use only kerosene, No. 1 home heating fuel, or diesel. If diesel is used, add a soot remover to every tankful.

WARNING: Risk of fire — do not add fuel when the product is operating or still hot.
WARNING: Do not use gasoline crankcase draining or oil containing gasoline, solvents or alcohol. Doing so will result in fi re and/or explosion.
7. Oil burning appliances shall be installed only in locations where combustible dusts and flammable gases or vapours are not present. Do not store or use gasoline near this machine.

8. Do not allow acids, caustic or abrasive fluids to pass through the pump.
9. Never run pump dry or leave spray gun closed longer than 1-2 minutes.
10. Keep operating area clear of all persons.

WARNING: High pressure spray can cause paint chips or other particles to become airborne and fly at high speeds. To avoid personal injury, eye, hand and foot safety devices must be worn.
11. Eye, hand, and foot protection must be worn when using this equipment.

WARNING: This machine can exceed 85 dB, appropriate ear protection must be worn.

WARNING: Risk of injury. Hot surfaces can cause burns. Use only designated gripping areas of spray gun and wand. Do not place hands or feet on non-insulated areas of the pressure washer.
12. To reduce the risk of injury, close supervision is necessary when a machine is used near children. Do not allow children to operate the pressure washer. This machine must be attended during operation.

WARNING: High pressure developed by these machines will cause personal injury or equipment damage. Keep clear of nozzle. Use caution when operating. Do not direct discharge stream at people, or severe injury or death will result.

WARNING: Protect machine from freezing.
15. To keep machine in best operating conditions, it is important you protect machine from freezing. Failure to protect machine from freezing could cause malfunction of the machine and result in death, serious bodily injury, and/or property damage. Follow storage instructions specified in this manual.

16. Inlet water must be clean fresh water and no hotter than 90°F.

WARNING: Risk of asphyxiation. Use this product only in a well ventilated area.
17. Avoid installing machines in small areas or near exhaust fans. Adequate oxygen is needed for combustion or dangerous carbon monoxide will result.

18. Manufacturer will not be liable for any changes made to our standard machines or any components not purchased from Pumps Australia Pty Ltd.
19. The best insurance against an accident is precaution and knowledge of the machine.

WARNING: Be extremely careful when using a ladder, scaffolding or any other relatively unstable location. The cleaning area should have adequate slopes and drainage to reduce the possibility of a fall due to slippery surfaces.
20. Do not overreach or stand on unstable support. Keep good footing and balance at all times.
21. Do not operate this machine when fatigued or under the influence of alcohol, prescription medications, or drugs.

OPERATION INSTRUCTIONS

Before Starting

WARNING: Check hoses, valves, fittings, and fuel connections (If powered by diesel or petrol) daily for signs of wear, cracks and looseness, and replace as required.

1. Read all manuals provided with this Hydrostatic Tester. Become familiar with location and function of all operating and safety controls.
2. Connect water supply hose to the standard garden hose connector. The water source and supply hose must be capable of providing at least twice the output, for example an HYDRA10 uses 10LPM (Litres Per Minute), a water source of 20 LPM is highly recommended.

3. Fill fuel tank (If applicable). Use the correct fuel type for your engine.
4. Check pump and engine oil levels.

IMPORTANT: If the Hydrostatic Tester has not been used for an extended period of time, change the regulator from pressure to by-pass and turn on water supply. Allow water to run from by-pass until clear.

To Start

IMPORTANT: The water must be turned on before starting. Running the pump dry will cause damage to pump seals and void warranty.

IMPORTANT: DO NOT allow the machine to run in bypass for more than 10 minutes at any one time or damage to pump may occur.

1. Open the Regulator's valves to allow full flow without pressure.
2. Connect your water source and allow the water to start flowing
3. Start your Engine or Motor
4. Adjust pressure, first loosen the locknut. Turn the T-handle/Knob clockwise to increase and counterclockwise to decrease the pressure.
5. Upon reaching desired pressure setting, tighten locknut and prepare to begin test.

To Stop

1. Turn the key on the engine to OFF.
2. Turn OFF water supply.
3. Open valves to relieve system pressure.

TROUBLESHOOTING

Sympton	Possible Cause	Solution
Oil leak between crankcase and pumping section	Worn rod oil seals	Replace crankcase piston rod seals
Frequent or premature failure of the packing	Cracked, damaged or worn plunger	Replace plungers
	Overpressure to inlet manifold	Reduce inlet pressure
	Material in the fluid being pumped	Install proper filtration on pump inlet plumbing
	Excessive pressure and/or temperature of fluid being pumped	Check pressures and fluid inlet temperature; be sure they are within specified range
Pump runs but produces no flow	Pump is not primed	Flood suction then restart pump
Pump fails to prime	Air is trapped inside pump	Disconnect discharge hose from pump. Flood suction hose, restart pump and run pump until all air has been evacuated
Pump loses prime, chattering noise, pressure fluctuates	Air leak in the suction hose or inlet	Remove suction line and inspect it for a loose liner or debris lodged in the hose. Avoid all unnecessary bends. Do not kink hose
	Clogged suction strainer	Clean strainer
Low pressure at nozzle	Unloader valve is by-passing	Make sure nozzle is matched to the flow and pressure of the pump. If the nozzle is worn, replace
	Incorrect or worn nozzle	Replace packing or valves
	Worn packing or valves	Clean or replace valves
Pressure gauge fluctuates	Valves worn or blocked by foreign bodies	Clean or replace valves
	Seals worn	Replace Seals
Low-pressure	Worn nozzle	Replace with nozzle of proper size
	Belt slippage	Tighten or replace with correct belt
	Air leak in inlet plumbing	Disassemble, reseal and reassemble
	Relief valve stuck, partially plugged or improperly adjusted valve seat worn	Clean and adjust relief valve; check for worn or dirty valve seats
	Worn packing. Abrasive in pumped in cavitation. Inadequate water	Install proper filter suction at inlet manifold must be limited to lifting less than 20 feet of water or 8.5 psi vacuum
	Worn inlet, discharge valve blocked or dirty	Replace inlet and discharge valve
Pump runs extremely rough, pressure very low	Inlet restrictions and/or air leaks	Clean out foreign material
	Stuck inlet or discharge valve	Replace worn valves
Water leakage from under manifold	Worn packing or cracked plunger	Install new packing or plunger
Slight leak, oil leaking in the area of crankshaft	Worn crankshaft seal or improperly installed oil seal o-ring	Remove oil seal retainer and replace damaged 0-ring and/or seals
	Bad bearing	Replace bearing
Excessive play at the end of the crankshaft pulley	Worn the main bearing from excessive tension on drive belt	Replace crankcase bearing and/or tension drive belt
Water in crankcase	Humid air condensing into water inside the crankcase	Change oil intervals
	Worn packing and/or cracked plunger	Replace packing. Replace plunger
Loud knocking noise in pump	Cavitation or sucking air	Check water supply is turned on
	Pulley loose on crankshaft	Check key and tighten set screw
	Broken or worn bearing	Replace bearing

HOW TO USE THE HYDRA 3WAY VALVE SYSTEM

Fig 1.

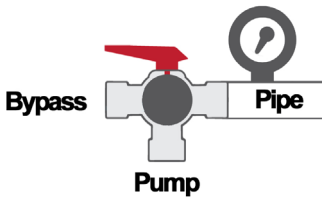

Step 1

Before turning the unit on, make sure the 3-way ball valve is on to the bypass mode. *(As Seen in Fig 1.)*

Fig 2.

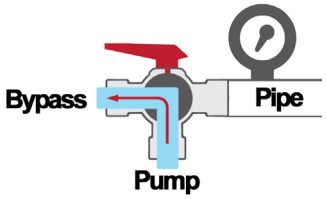

Step 2

Connect Water to the Hydra Unit, do not turn on until water is flowing through the bypass outlet. Once Water has started flowing, turn unit on. *(As Seen in Fig 2.)*

Fig 3.

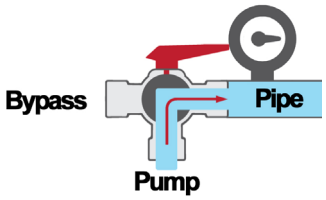

Step 3

Slowly turn the 3-way ball valve handle to the enable pressurization of pipe, whilist watching the gauge on the outlet of the pressurized feed. *(As Seen in Fig 3.)*

Fig 4.

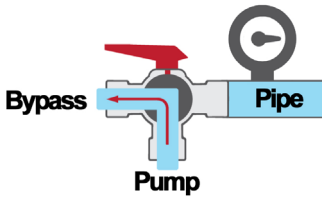

Step 4

Once optimal pressurazation has been achieved, move the handle back to bypass line. This leaves the pressure locked off in the pipe, while allowing no back pressure on the pump. Continue this process until the test is complete and the desired results have been achieved. *(As Seen in Fig 4.)*

Fig 5.

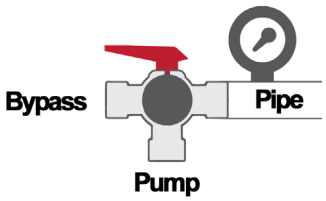

Step 5

Turn off the Hydra unit and Discharge water in pipe.

ADJUSTING YOUR UNLOADER

Fig 6.

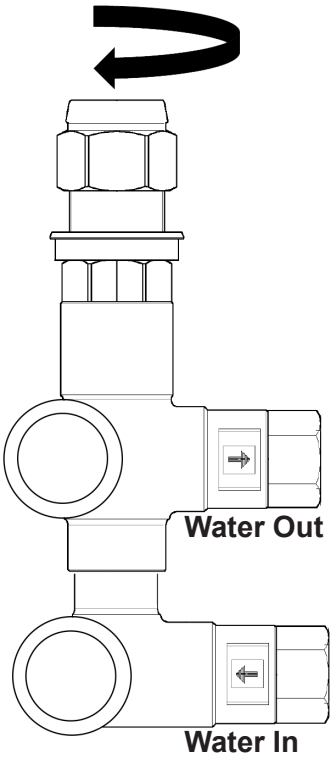

Increase Pressure

Whilst the unit is running, turn the Knob on the Unloader clockwise to increase the resistance inside the valve, this will increase the pressure. It's advised to watch the pressure gauge while doing this. *(As Seen in Fig 6.)*

Fig 7.

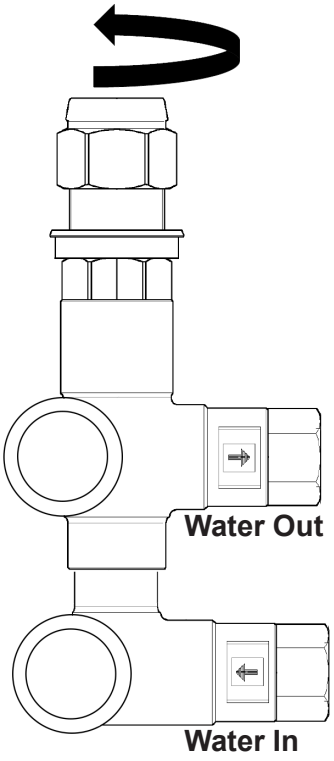

Decrease Pressure

Whilst the unit is running, turn the Knob on the Unloader counter-clockwise to decrease the resistance inside the valve, this will decrease the pressure. It's advised to watch the pressure gauge while doing this. *(As Seen in Fig 7.)*

Note:

Do Not Exceed the maximum pressure of your Hydra Unit! Doing so can and will destroy your unit.

HYDRA10 / HYDRA15

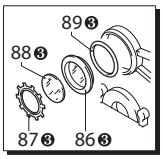

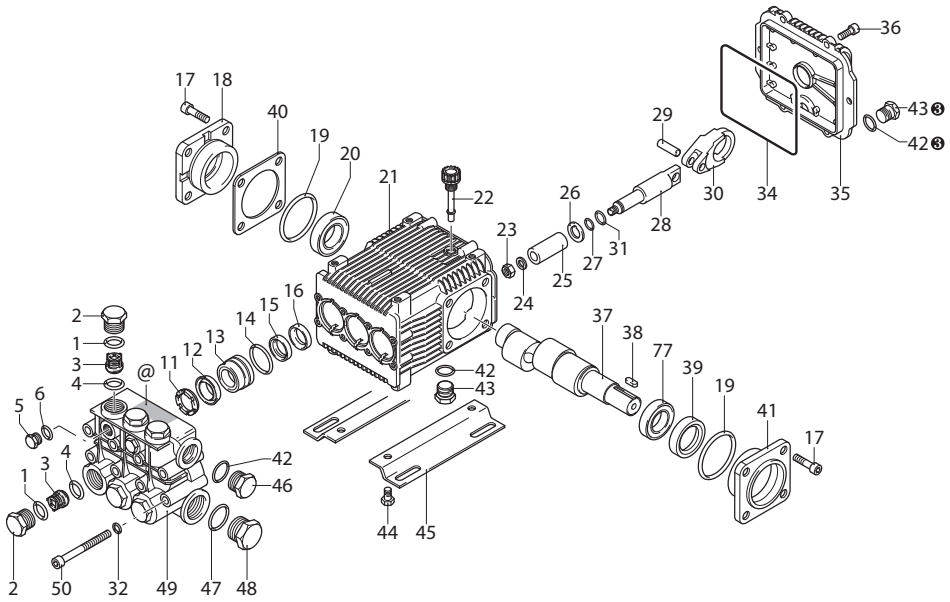

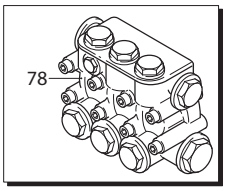

UN003304-MR

KIT RICAMBI / *PART KITS*

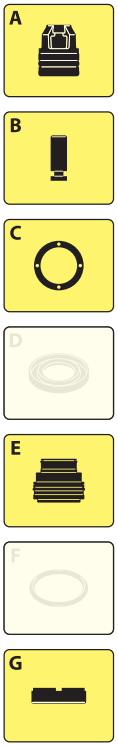

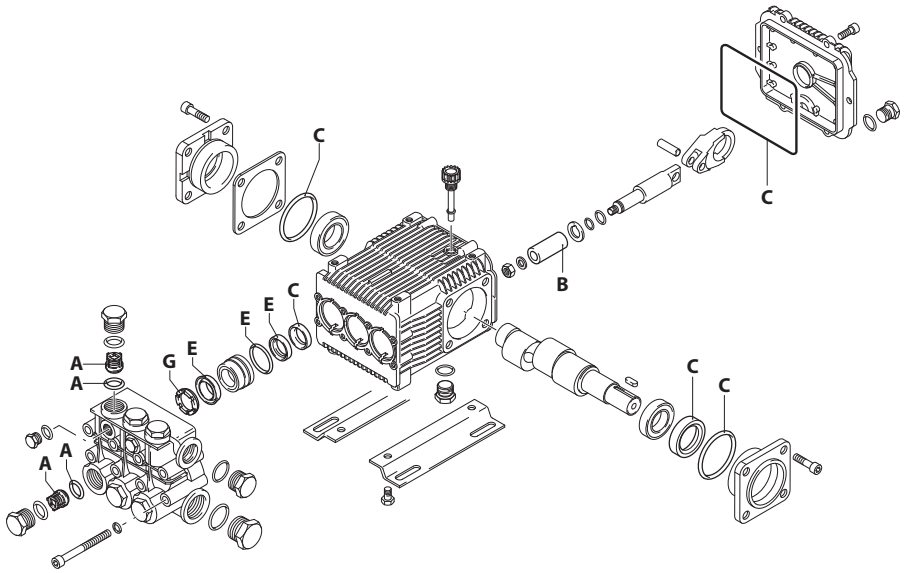

UN003305-AS

PUMPS AUSTRALIA PTY LTD
PHONE: 1800 790 915

HYDRA10 / HYDRA15

Pos.	Cod.	Denominazione		Description	Qt	Note
1	960160	Guarnizione OR	Ø 17,86x2,62	O-ring	6	
2	960090	Tappo		Plug	6	◔ RK C=54Nm
	960850	Tappo		Plug	6	◔ RK H ☞ C=54Nm
	1380740	Tappo		Plug	6	◔ RK H C=54Nm
3	1389051	Valvola completa		Complete valve	6	
4	880830	Guarnizione OR	Ø 15,54x2,62	O-ring	6	
5	880581	Tappo	1/4" G	Plug	2	◔ RK C=15Nm
	1380690	Tappo	1/4" G nickel	Plug	2	◔ RK H - H ☞ C=15Nm
6	820510	Guarnizione OR	Ø 10,82x1,78	O-ring	2	
11	960110	Anello	appoggio Ø 18	Ring	3	❍ ❒ ● ✪
	840300	Anello	appoggio Ø 20	Ring	3	☆
	840320	Anello	appoggio Ø 22	Ring	3	★
12	1382740	Tenuta acqua	Ø 18	Water seal	3	❍ ❒ ● ✪
	840290	Tenuta acqua	Ø 20	Water seal	3	☆
	840330	Tenuta acqua	Ø 22	Water seal	3	★
13	1380090	Guida pistone	Ø 18	Piston guide	3	❍ ❒ ● ✪
	1380150	Guida pistone	Ø 20	Piston guide	3	☆
	1380160	Guida pistone	Ø 22	Piston guide	3	★
14	961240	Guarnizione OR	Ø 31,47x1,78	O-ring	3	
15	880330	Tenuta acqua	Ø 18	Water seal	3	❍ ❒ ● ✪
	840280	Tenuta acqua	Ø 20	Water seal	3	☆
	840340	Tenuta acqua	Ø 22	Water seal	3	★
16	1383130	Anello	tenuta	Ring	3	
17	850370	Vite	TCEI M8x16	Screw	8	C=24,5Nm
18	1380050	Supporto	cuscinetto chiuso	Support	1	
19	640030	Guarnizione OR	Ø 59,99x2,62	O-ring	2	
20	2280340	Cuscinetto		Bearing	1	
21	1382770	Corpo pompa		Pump body	1	
22	880130	Tappo		Plug	1	
23	962010	Dado		Nut	3	◔ C=20Nm
24	962000	Rondella		Washer	3	
25	1380940	Pistone	Ø 18	Piston	3	❍ ❒ ● ✪
	1380930	Pistone	Ø 20	Piston	3	☆
	1382360	Pistone	Ø 22	Piston	3	★
26	1380950	Disco		Plate	3	
27	600180	Guarnizione OR	Ø 7,66x1,78	O-ring	3	
28	1380920	Pistone	di guida	Piston	3	
29	1380060	Spina		Pin	3	
30	1383050	Biella	alluminio	Connecting-rod	3	
	1383020	Biella	bronzo	Connecting-rod	3	
31	1080401	Anello	antiestrusione	Ring	3	
32	1381850	Rondella		Washer	8	

Pos.	Cod.	Denominazione		Description	Qt	Note
34	1780510	Guarnizione OR	Ø 106x3	O-ring	1	
35	1789010	Coperchio	completo	Cover	1	
36	1343510	Vite	TCEI M6x14	Screw	6	C=10Nm
37	2280100	Albero	marcato 5	Shaft	1	❍
	2280080	Albero	marcato 3	Shaft	1	❒
	2280070	Albero	marcato 2	Shaft	1	● ★
	2280060	Albero	marcato 1	Shaft	1	✪ ☆
38	1380520	Linguetta		Key	1	
39	180340	Anello	tenuta	Ring	1	(b)
40	1380120	Spessore 0,10 mm		Shim 0.10 mm	1÷3	
	1380130	Spessore 0,19 mm		Shim 0.19 mm	1÷3	
	1380530	Spessore 0,25 mm		Shim 0.25 mm	1÷3	
	1382810	Spessore 0,05 mm		Shim 0.05 mm	1÷3	
41	1380040	Supporto	cuscinetto aperto	Support	1	
42	740290	Guarnizione OR	Ø 14x1,78	O-ring	3	❸
43	1980740	Tappo	3/8" G ottone	Plug	2	❸ C=20Nm
44	1263130	Vite	TE M8x12	Screw	4	Optional C=20Nm
45	1380141	Piede		Foot	2	Optional
46	1980740	Tappo	3/8" G ottone	Plug	1	RK C=25Nm
	1981180	Tappo	3/8" G nickel	Plug	1	RK H - H ☞ C=25Nm
47	180101	Guarnizione OR	Ø 17,5x2	O-ring	1	
48	820361	Tappo	1/2" G ottone	Plug	1	RK C=40Nm
	960870	Tappo	1/2" G nickel	Plug	1	RK H - H ☞ C=40Nm
49	1381071	Testa		Head	1	Ø18 RK
	1381070	Testa	nikelata	Head	1	Ø18 RK H - H ☞
	1380020	Testa		Head	1	Ø20-22 RK
	1380680	Testa	nikelata	Head	1	Ø20-22 RK H
50	820150	Vite	TCEI M8x70	Screw	8	C=24,5Nm
77	1383140	Cuscinetto		Bearing	1	
78	1389270	Premontaggio testa		Head assembly	1	Ø18 RK
	1389272	Premontaggio testa		Head assembly	1	Ø18 RK H
	1389271	Premontaggio testa		Head assembly	1	Ø18 RK H ☞
	1389208	Premontaggio testa		Head assembly	1	Ø20 RK
	1389212	Premontaggio testa		Head assembly	1	Ø20 RK H
	1389216	Premontaggio testa		Head assembly	1	Ø22 RK
	1389220	Premontaggio testa		Head assembly	1	Ø22 RK H
86	1260250	Indicatore livello		Level gauge	1	❸
87	1260430	Anello		Ring	1	❸
88	1780690	Disco		Plate	1	❸
89	1140450	Guarnizione OR	Ø 20,24x2,62	O-ring	1	❸

❸ Compreso nel cod. 1789010 / *Part of part n° 1789010*

KIT RICAMBI - *PART KITS*

A=KIT 2864 valvole *valves*		pistoni *pistons*	B=KIT 2757 ø 18 B=KIT 2758 ø 20 B=KIT 2759 ø 22	C=KIT 1855 tenute olio *oil seals*	
Pos.	**Q.ty**	**Pos.**	**Q.ty**	**Pos.**	**Q.ty**
3	6	25	3	16	3
4	6			19	2
				34	1
				39	1

tenute acqua *water seals*	E=KIT 1857 ø 18 E=KIT 1887 ø 20 E=KIT 1888 ø 22	anelli appoggio *support rings*	G=KIT 1829 ø 18 G=KIT 1815 ø 20 G=KIT 1816 ø 22
Pos.	**Q.ty**	**Pos.**	**Q.ty**
12	3	11	3
14	3		
15	3		

SIMBOLOGIA - *SYMBOLS*

❍ Per / *For*
RK 11.14 cod. 20630
RK 11.20 H cod. 20631
RK 11.25 H ☞ cod. 20632

❒ Per / *For*
RK 13.12
RK 13.17 cod. 20634
RK 13.20 H cod. 20635

● Per / *For*
RK 14.16 cod. 20636

✪ Per / *For*
RK 15.15 cod. 20637
RK 15.20 cod. 20897
RK 15.20 H cod. 20638
RK 15.25 H ☞ cod. 20639
RK 15.28 H ☞ cod. 20640

☆ Per / *For*
RK 18.12 cod. 20641
RK 18.16 H
RK 18.20 H cod. 20643
RK 18.28 H ☞ cod. 21467

★ Per / *For*
RK 21.10 cod. 20644
RK 21.15 H cod. 20645
RK 21.20 H cod. 21129

C Tolleranza coppia di serraggio +0÷-10% / *Tightening torque tolerance +0÷-10%*
◔ Avvitare con Loxeal 55-14 / *Screw with Loxeal 55-14*
(b) Montare anello tenuta con attrezzo cod. 2281010 / *Fit the seal with tool code nr. 2281010*
☞ OLTRE 250 bar - *OVER 3600 psi*
@ Posizionamento targa di identificazione / *Identification plate positioning*

PARTI SPECIALI IN VITON *SPECIAL PARTS*

Cod. - *Part n°*	Denominazione - *Description*	Q.tà - *Q.ty*
2809	Tenute acqua/*Water seals* ø 18	1
2810	Tenute acqua/*Water seals* ø 20	1
2811	Tenute acqua/*Water seals* ø 22	1

Olio - *Oil*			
Tipo / *Type*	Quantità / *Quantity*		
SAE 15W40	0,435 Kg		

PUMPS AUSTRALIA PTY LTD
PHONE: 1800 790 915

WE'RE NOT JUST HYDROSTATIC TESTERS!

Pumps Australia is Australian owned and operated, and has been supplying and distributing high-quality and reliable products to the Australian and International market for over 20 years. We are industry leaders in a huge range of Pumps & Pumping Equipment, Pressure Cleaning (Hot, Cold and Steam) Custom Design & Builds powered by Petrol, Diesel, Electric and Hydraulic Driven.

At Pumps Australia we pride ourselves on offering a wide range of durable and robust high-pressure cleaners, pumps and systems. All of our units are Australian made and fully assembled and tested at the Pumps Australia facility.

We Also Specialise in:

- FIRE FIGHTING PUMPS
- HOUSEHOLD PUMPS
- PETROL & DIESEL ENGINES
- TRANSFER PUMPS
- HIGH PRESS. BLASTERS
- AIRLESS PAINT SPRAYERS
- TRASH PUMPS
- SERVICE & REPAIR
- AGRICULTURE SPRAYERS
- CHEMICAL PUMPS
- FUEL TRANSFER PUMPS
- HIGH PRESS. ACCESSORIES

WE SERVICE & REPAIR

ALL MAKES AND MODELS IN OUR FULLY STOCKED WORKSHOP IN WA!

PUMPS AUSTRALIA

PUMPSAUSTRALIA.COM.AU

212 Welshpool Rd, Welshpool WA 6106

FREE CALL 1800 790 915 FOR MORE INFORMATION ON THESE AND OTHER PRODUCTS